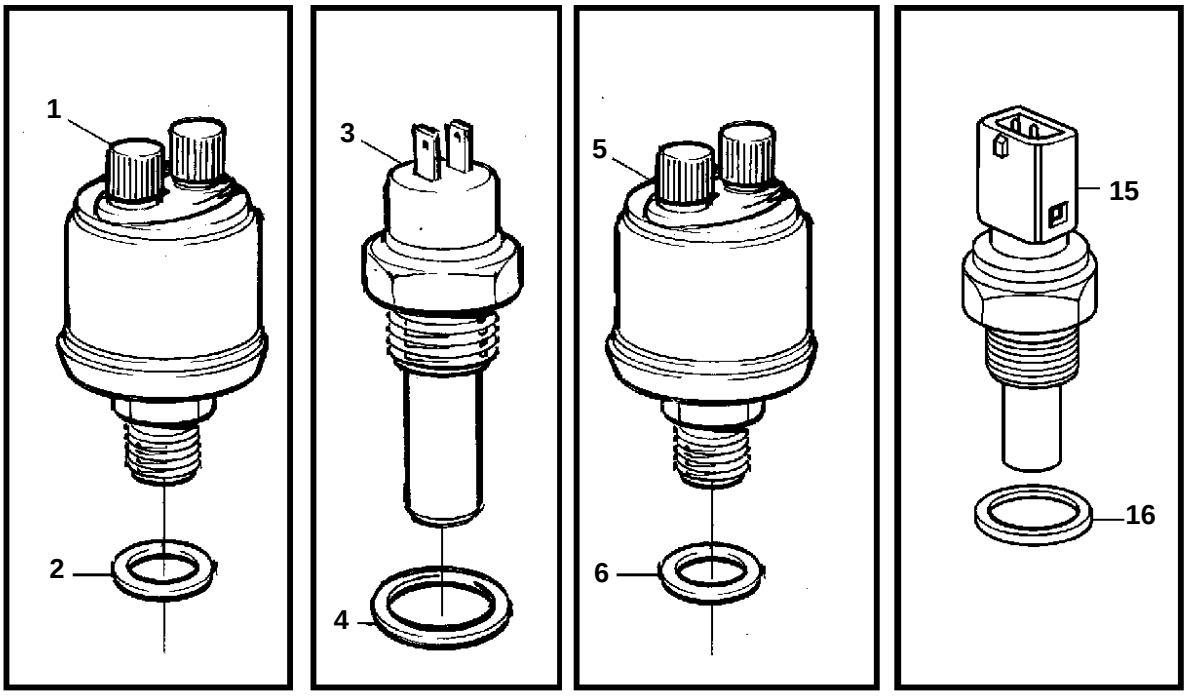
1
2
3
4
5
6
15
16

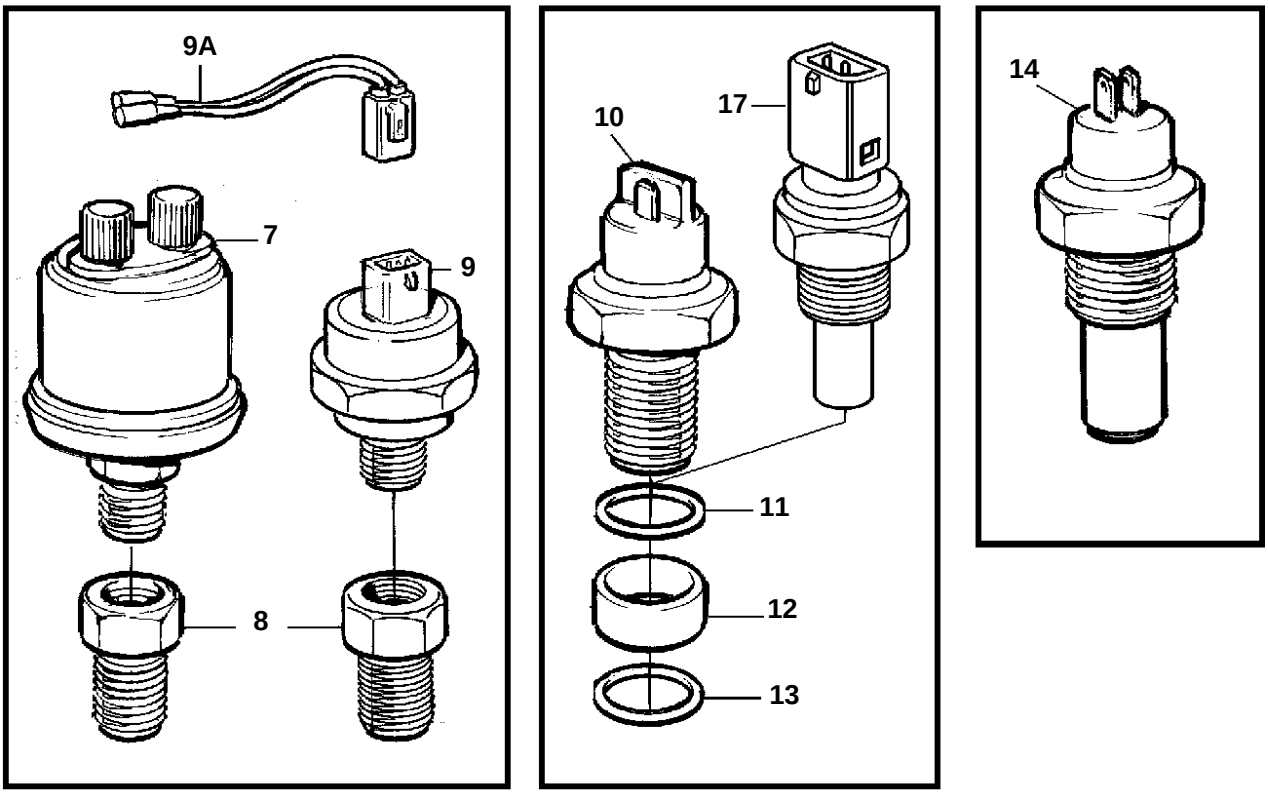
9A
7
9
8
10
17
11
12
13
14

REF	PART NO.	QTY	DESCRIPTION		NOTES
1	866840	1	Pressure sensor, reverse gear		0-30bar (837781)
2	947624	1	Gasket		
3	843325	1	Temperature sensor, coolant water temp.		120°C
	858596	1	Temperature sensor, coolant water temp.		For double steering positions.
4	11998	1	Gasket		(947624)
5	866838	1	Pressure sensor, turbo		ALT, 0-2bar (837782)
	872196	1	Pressure sensor, turbo		ALT,0-3bar
6	947624	1	Gasket		FOR 866838, 872196
7	866833	1	Pressure sensor, oil-engine		0-10bar (843231)
	866834	1	Pressure sensor, oil-engine		0-10bar (843232). For double instruments.
8	835980	2	Nipple		
	809109	1	Elbow nipple		ALT
9	863169	1	Pressure monitor		STOP 0,7bar(864415)
9A	873601	1	Cable		
10	1502028	1	Tachometer sensor		
11	947624	1	Gasket		
12	863413	1	Spacer sleeve		L=9,7mm (865808)
13	949656	1	O-ring		
14	862177	1	Thermo monitor, temperature		